marathon®

Multispeed Motors

Model No: 182TTDBD7412
Catalog No: Y484B

Multispeed Motor, 3 & 0.75 HP, 3 Ph, 60 & 60 Hz, 200-230 & 200-230 V, 1800 RPM, 182T Frame, DP

©2026 Marathon, All Rights Reserved.

marathon®

Product Information Packet: Model No: 182TTDBD7412, Catalog No: Y484B Multispeed Motor, 3 & 0.75 HP, 3 Ph, 60 & 60 Hz, 200-230 & 200-230 V, 1800 RPM, 182T Frame, DP

Nameplate Specifications

Phase	**3**	Output HP	**3 & 0.75 Hp**
Output KW	**2.2 & 0.56 kW**	Voltage	**200-230 & 200-230 V**
Speed	**1768 & 878 r/min**	Synchronous RPM	**1800 & 900 r/min**
Service Factor	**1.15 & 1.15**	Frame	**182T**
Enclosure	**Drip Proof**	Thermal Protection	**No Protection**
Efficiency	**85.5 & 79.3 %**	Ambient Temperature	**40 °C**
Frequency	**60 & 60 Hz**	Current	**8.5-7.5 & 3.2-3 A**
Power Factor	**84**	Duty	**Continuous**
Insulation Class	**F**	Design Code	**1VT**
KVA Code	**L**	Drive End Bearing Size	**6206**
Opp Drive End Bearing Size	**6203**	UL	**Recognized**
CSA	**Y**	CE	**Y**
IP Code	**22**	Number of Speeds	**2**

Technical Specifications

Electrical Type	**Squirrel Cage Induction Run**	Starting Method	**Across The Line**
Poles	**4/8**	Rotation	**Reversible**
Resistance Main	**1.3749 O**	Mounting	**Rigid Base**
Motor Orientation	**Horizontal**	Drive End Bearing	**Ball**
Opp Drive End Bearing	**Ball**	Frame Material	**Rolled Steel**
Shaft Type	**T**	Shaft Diameter	**1.125 in**
Assembly/Box Mounting	**F1/F2 Capable**		

Drawings

Connection Drawing	**EE7322**	Outline Drawing	**SS600198-100**

This is an uncontrolled document once printed or downloaded and is subject to change without notice. Date Created: 16/10/2026

DASH NO.	B	C	E	2E	2F	2FF	BA	BS	MOUNTING	FRAME
100	6.50	12.25	3.75	7.50	4.50	5.50	2.75	4.15	F1 OR F2	182T
200		13.25						5.15		184T

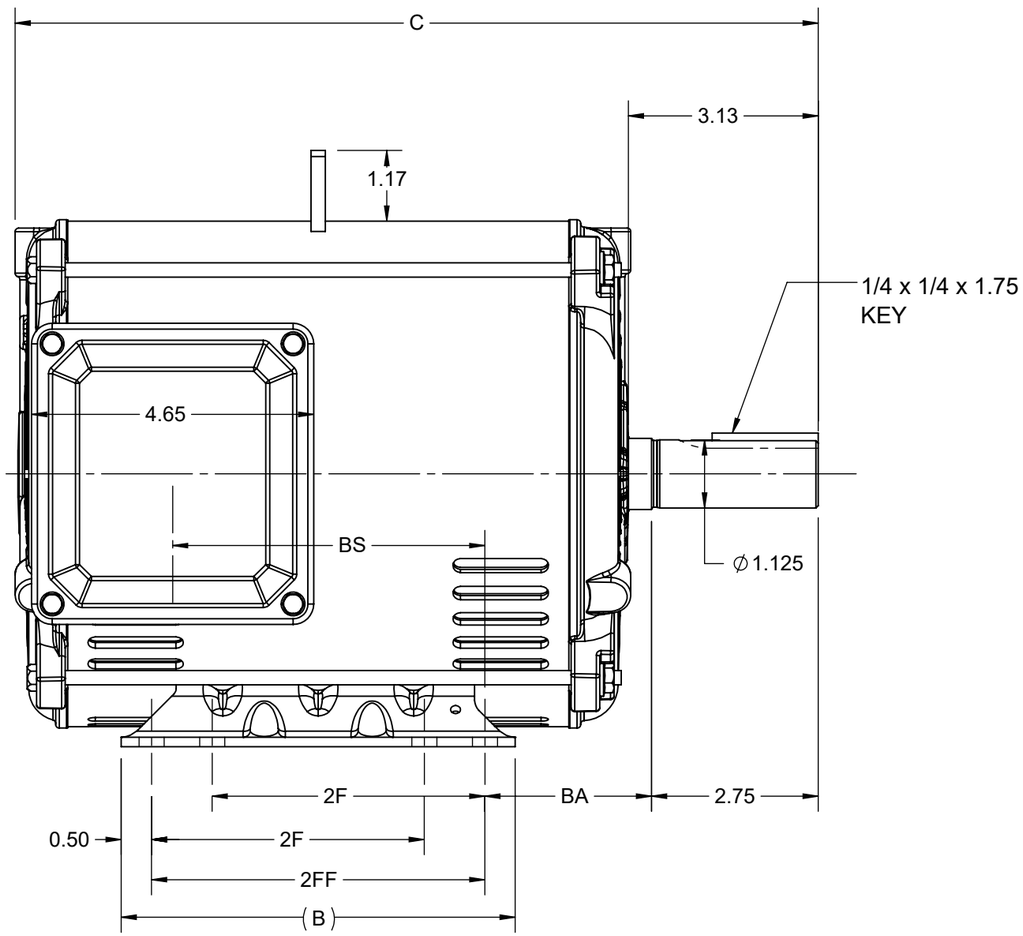

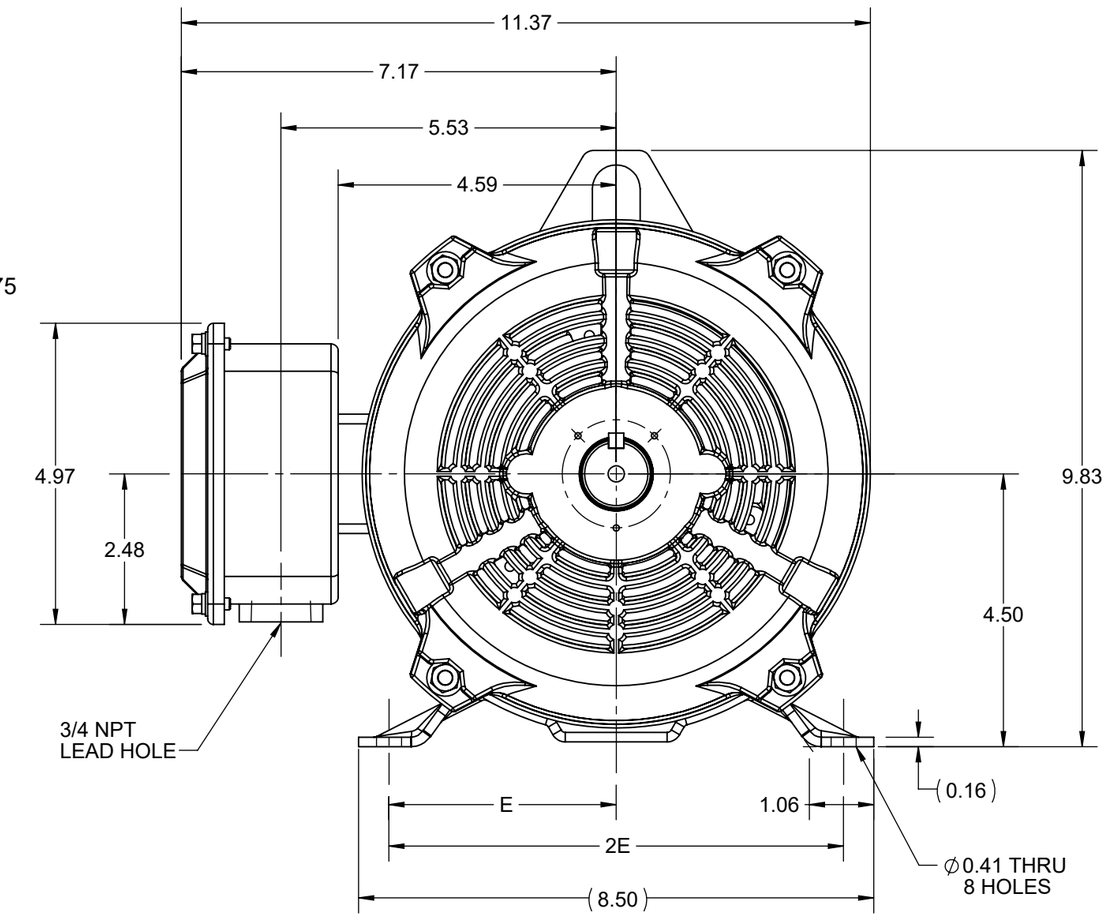

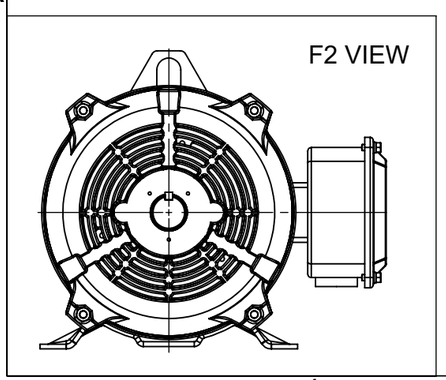

DRAWING REVISION	REVISION BY	REV DATE/© DATE
G	SB	08/11/2025
REQUEST NUMBER	APPROVED BY	DATE
CR-0023556	SBD	08/11/2025

REQUEST NUMBER DESCRIPTION
DRAWING TITLE BLOCK UPDATED

COPYRIGHT (PER REVISION DATE) MARATHON ELECTRIC, LLC. ALL RIGHTS RESERVED. PROPRIETARY AND CONFIDENTIAL INFORMATION - THIS DOCUMENT IS THE PROPERTY OF MARATHON ELECTRIC, LLC. ("OWNER") AND CONTAINS OWNER'S PROPRIETARY INFORMATION. ANY PERSON, CORPORATION OR OTHER FIRM RECEIVING IT IS DEEMED, BY RECEIVING IT, TO AGREE THAT IT, AND/OR ANY PART OF IT, SHALL NOT BE DISCLOSED TO ANY PERSON, CORPORATION OR OTHER ENTITY, DUPLICATED, AND/OR USED, EXCEPT AS EXPRESSLY APPROVED IN WRITING IN ADVANCE BY OWNER. THIS DOCUMENT SHALL BE RETURNED TO OWNER UPON REQUEST. IT MAY BE SUBJECT TO CERTAIN RESTRICTIONS UNDER APPLICABLE EXPORT CONTROL LAWS AND REGULATIONS.

PRIMARY DIMENSIONS ARE INCH
mm DIMENSIONS IN [BRACKETS]
ARE FOR REFERENCE ONLY

DRAWN BY	PRIYA
DATE	12/03/2018
APPROVED BY	SBD
DATE	12/03/2018
REFERENCE	
THIRD ANGLE PROJECTION	

marathon™

DESCRIPTION
OUTLINE
182/184T FR -NEMA-ODP RS

MATERIAL | PROCESS/FINISH

SIZE B | DRAWING NUMBER SS600198 | SHEET 1 OF 1

Uncontrolled Copy

THREE PHASE MOTOR
SINGLE VOLTAGE
TWO SPEED - SGL. WDG.
VARIABLE TORQUE

LOW SPEED

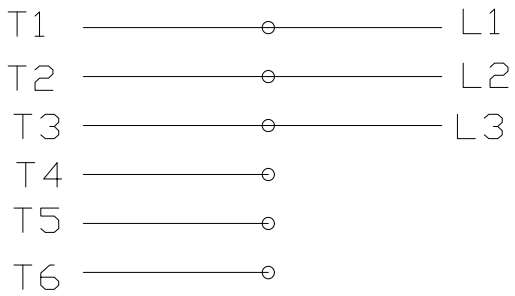

HIGH SPEED

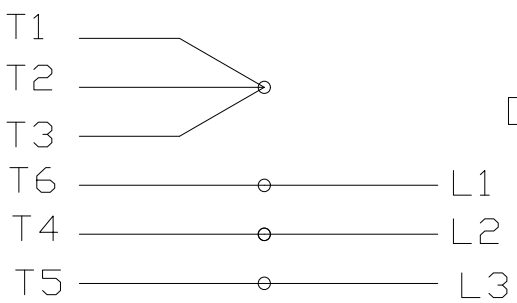

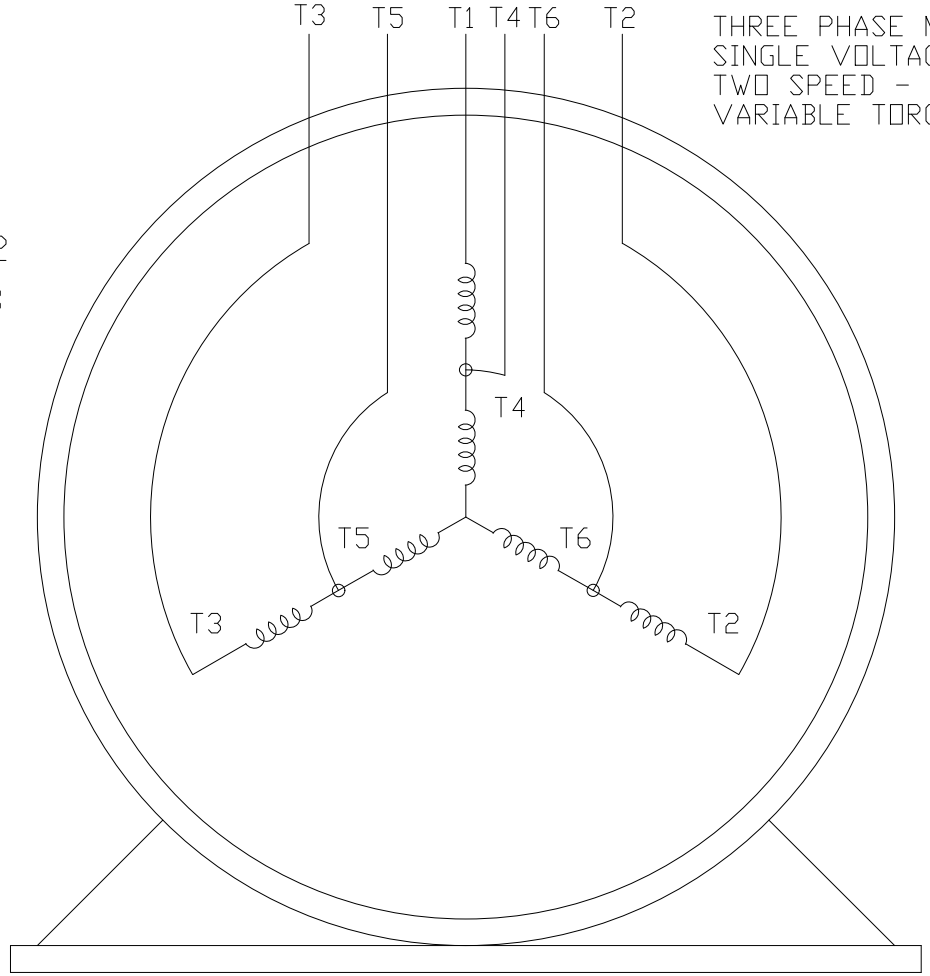

VIEW OF TERMINAL END

T612C
T48B

FOR DUAL LEADS

LOW SPEED

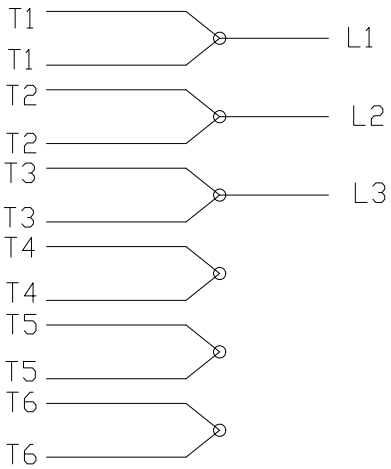

HIGH SPEED

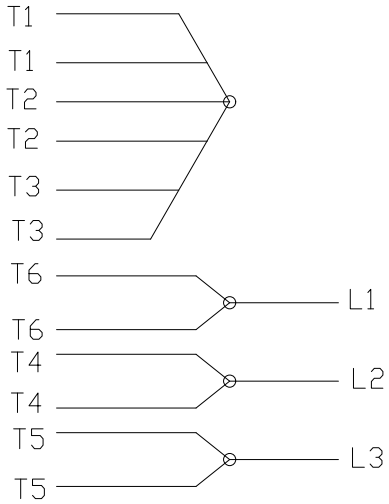

DRAWING REVISION C	REVISION BY SB	REV DATE/ © DATE 08/20/2025	PRIMARY DIMENSIONS ARE INCH mm DIMENSIONS IN [BRACKETS] ARE FOR REFERENCE ONLY	DRAWN BY PGK	marathon™
REQUEST NUMBER CR-0023600	APPROVED BY SBD	DATE 08/20/2025		DATE 12/26/1996	
REQUEST NUMBER DESCRIPTION DRAWING TITLE BLOCK UPDATED				APPROVED BY TB	DESCRIPTION CONN DIAGRAM 3Ø - SINGLE VOLTAGE - 2 SPEED
				DATE 01/07/1997	
				REFERENCE	MATERIAL / PROCESS/FINISH
				THIRD ANGLE PROJECTION	SIZE A / DRAWING NUMBER 4 of 6 EE7322 / SHEET 1 OF 1

COPYRIGHT (PER REVISION DATE) MARATHON ELECTRIC, LLC. ALL RIGHTS RESERVED. PROPRIETARY AND CONFIDENTIAL INFORMATION - THIS DOCUMENT IS THE PROPERTY OF MARATHON ELECTRIC, LLC. ("OWNER") AND CONTAINS OWNER'S PROPRIETARY INFORMATION. ANY PERSON, CORPORATION OR OTHER FIRM RECEIVING IT IS DEEMED, BY RECEIVING IT, TO AGREE THAT IT, AND/OR ANY PART OF IT, SHALL NOT BE DISCLOSED TO ANY PERSON, CORPORATION OR OTHER ENTITY, DUPLICATED, AND/OR USED, EXCEPT AS EXPRESSLY APPROVED IN WRITING IN ADVANCE BY OWNER. THIS DOCUMENT SHALL BE RETURNED TO OWNER UPON REQUEST. IT MAY BE SUBJECT TO CERTAIN RESTRICTIONS UNDER APPLICABLE EXPORT CONTROL LAWS AND REGULATIONS.

Data Sheet

Date: 12/14/2021
Customer:
Attention:
Submitted by: SHERYL KUEHMICHEL

marathon electric

182TTDBD7412

Submittal

Data @ 230 V

Motor Load Data

Load	0%	25%	50%	75%	100%	115%	125%	LR	
Current (Amps)	3.5	4.0	4.8	6.0	7.5	8.5	9.2	73.5	
Torque(ft-lb)	0.00	2.20	4.4	6.7	8.9	10.2	11.2	22.7	
RPM	1800	1792	1785	1775	1768	1,762	1760	0	
Efficiency (%)		78.5	86.0	87.9	85.5	87.6	87.3		
P.F. (%)	10.0	44.5	66.5	78.0	84.0	86.0	87.0	62.5	

Motor Speed Data

	LR	Pull-Up	BD	Rated	Idle
Speed (RPM)	0	884	1460	1768	1800
Current (Amps)	73.5	66.2	43.5	7.5	3.5
Torque(ft-lb)	22.7	19.3	33.2	8.9	0.00

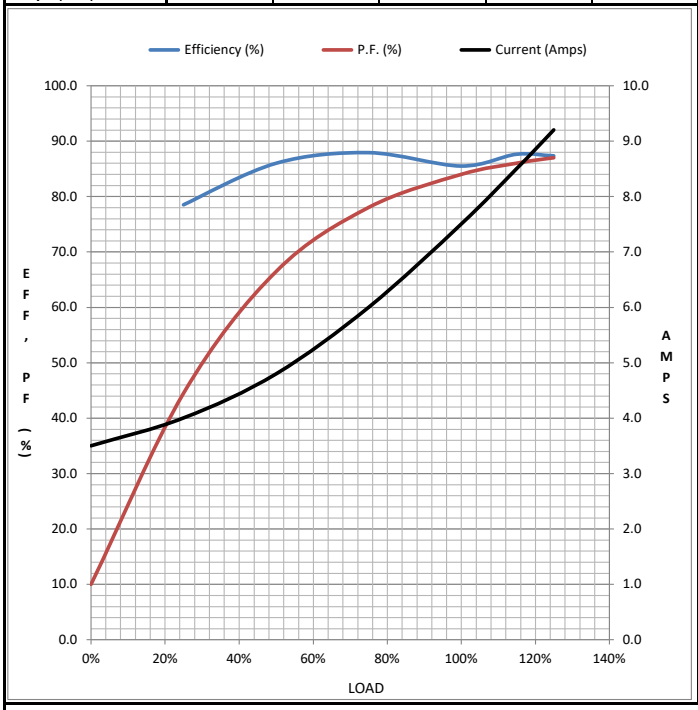

Information Block

HP	3.0
Sync. RPM	1800
Frame	182T
Enclosure	DP
Construction	TDR
Voltage	230 V
Frequency	60 Hz
Design	1VT
LR Code letter	L
Service Factor	1.15
Temp Rise @ FL	75 ° C
Duty	CONT
Ambient	40 ° C
Elevation	3,300 feet
Rotor/Shaft wk²	0.00 Lb-Ft²
Ref Wdg	HA3112(4-8)05 HS
Sound Pressure @ 1M	0 dBA
VFD Rating	NA
Outline Dwg	SS600198-100
Conn. Diag	EE7322

Additional Specifications:

CATALOG # Y484B

HIGH SPEED PERFORMANCE

NP VOLTAGE 200-230, 8.5-7.5

EQUIV CKT (OHMS / PHASE)

R1	R2	X1	X2	Xm
0.7916	0.3214	1.2997	1.2051	35.5868

Speed -Torque Curve

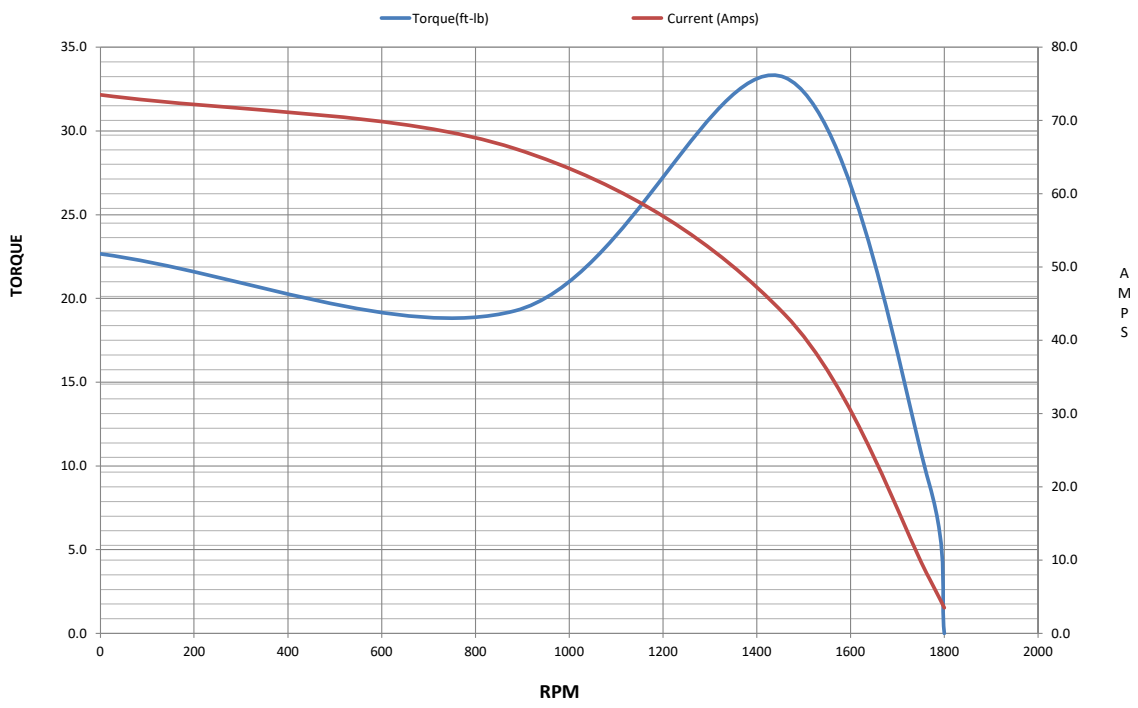

Data Sheet

Date: 12/14/2021
Customer:
Attention:
Submitted by: SHERYL KUEHMICHEL

marathon electric

182TTDBD7412

Submittal

Data @ 230 V

Motor Load Data

Load	0%	25%	50%	75%	100%	115%	125%	LR	
Current (Amps)	2.50	2.55	2.70	2.80	3.0	3.2	3.5	13.5	
Torque(ft-lb)	0.00	1.11	2.22	3.4	4.5	5.2	5.7	5.9	
RPM	900	895	890	885	878	875	872	0	
Efficiency (%)		58.1	72.0	77.3	79.3	79.7	79.7		
P.F. (%)	9.8	23.5	36.5	47.5	56.5	60.5	63.0	45.2	

Motor Speed Data

	LR	Pull-Up	BD	Rated	Idle
Speed (RPM)	0	439	768	878	900
Current (Amps)	13.5	12.2	8.4	3.0	2.50
Torque(ft-lb)	5.9	5.0	12.1	4.5	0.00

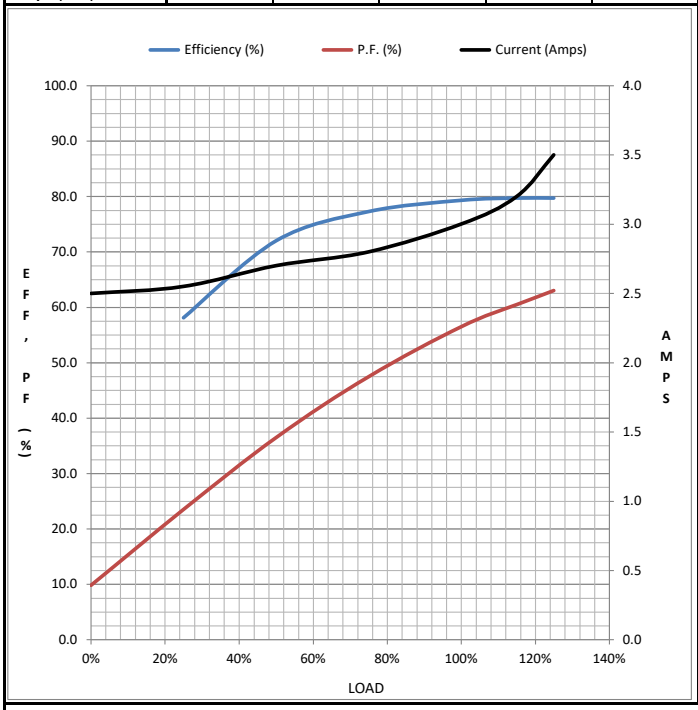

Information Block

HP	0.75
Sync. RPM	900
Frame	182T
Enclosure	DP
Construction	TDR
Voltage	230 V
Frequency	60 Hz
Design	1VT
LR Code letter	J
Service Factor	1.15
Temp Rise @ FL	70 ° C
Duty	CONT
Ambient	40 ° C
Elevation	3,300 feet
Rotor/Shaft wk²	0.00 Lb-Ft²
Ref Wdg	HA3112(4-8)05 HS
Sound Pressure @ 1M	0 dBA
VFD Rating	NA
Outline Dwg	SS600198-100
Conn. Diag	EE7322

Additional Specifications:

CATALOG # Y484B

LOW SPEED PERFORMANCE

NP VOLTAGE 200-230, 3.2-3

EQUIV CKT (OHMS / PHASE)

R1	R2	X1	X2	Xm
3.1671	1.4370	5.3699	6.2396	46.9864
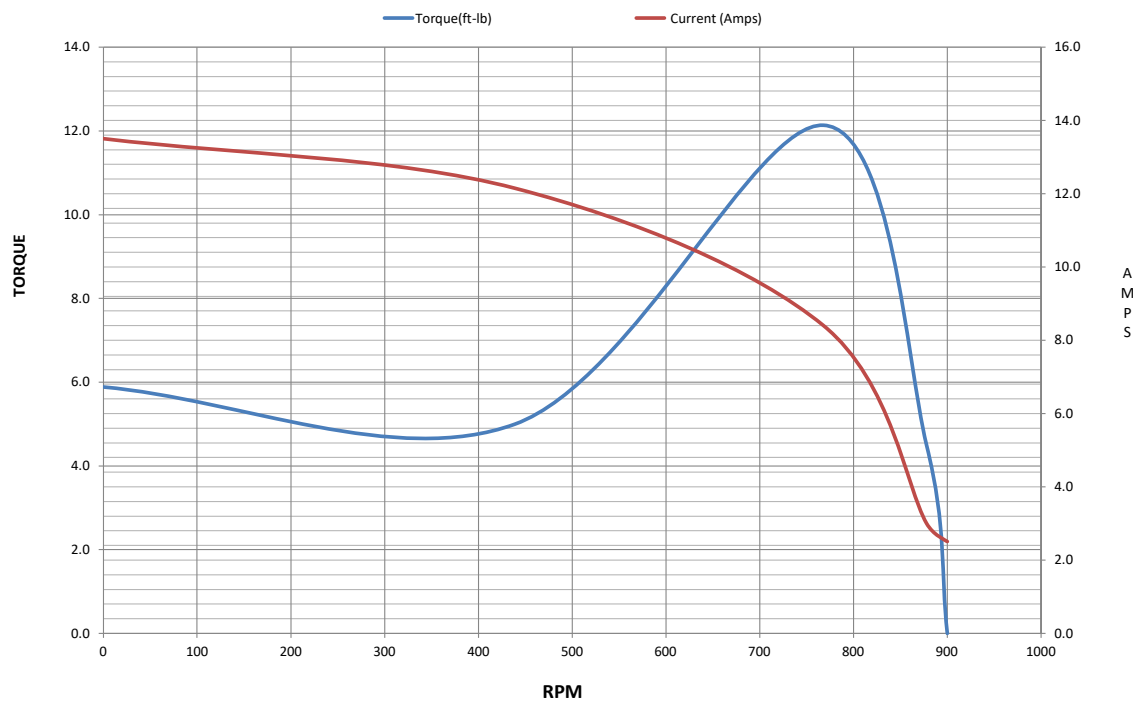
Speed -Torque Curve