marathon®

# Inverter (Vector) Duty Motors

**Model No:** 182THECD8048
**Catalog No:** Y980A

Inverter (Vector) Duty Motor, 3 HP, 3 Ph, 60 Hz, 230/460 V, 1800 RPM, 182TC Frame, EPNV

©2026 Marathon, All Rights Reserved.

marathon®

# Product Information Packet: Model No: 182THECD8048, Catalog No: Y980A  Inverter (Vector) Duty Motor, 3 HP, 3 Ph, 60 Hz, 230/460 V, 1800 RPM, 182TC Frame, EPNV

## Nameplate Specifications

| | | | |
|---|---|---|---|
| Phase | **3** | Output HP | **3 Hp** |
| Output KW | **2.2 kW** | Voltage | **230/460 V** |
| Speed | **1765 r/min** | Synchronous RPM | **1800 r/min** |
| Service Factor | **1.00** | Frame | **182TC** |
| Enclosure | **Explosion Proof Non Ventilated** | Thermal Protection | **Thermostat** |
| Efficiency | **89.5 %** | Ambient Temperature | **50 °C** |
| Frequency | **60 Hz** | Current | **8.0/4.0 A** |
| Power Factor | **79** | Duty | **Continuous** |
| Insulation Class | **F** | Design Code | **INV** |
| KVA Code | **L** | Drive End Bearing Size | **6207** |
| Opp Drive End Bearing Size | **6205** | UL | **UL Listed And CSA Certified** |
| CSA | **Y** | CE | **N** |
| IP Code | **54** | Number of Speeds | **1** |
| Hazardous Location | **DIV 1 EXP PROOF CL I GR CD CL II GR FG T3C** | | |

## Technical Specifications

| | | | |
|---|---|---|---|
| Electrical Type | **Squirrel Cage Inverter Duty** | Starting Method | **Inverter Only** |
| Poles | **4** | Rotation | **Reversible** |
| Resistance Main | **3.542 O** | Mounting | **Rigid Base** |
| Motor Orientation | **Horizontal** | Drive End Bearing | **Ball** |
| Opp Drive End Bearing | **Ball** | Frame Material | **Cast Iron** |
| Shaft Type | **T** | Assembly/Box Mounting | **F1/F2 Capable** |
| Inverter Load | **Constant 2000:1** | | |

## Drawings

| | | | |
|---|---|---|---|
| Connection Drawing | **A-EE7308T** | Outline Drawing | **SS69060-800** |

This is an uncontrolled document once printed or downloaded and is subject to change without notice. Date Created: 21/10/2026

SS69060

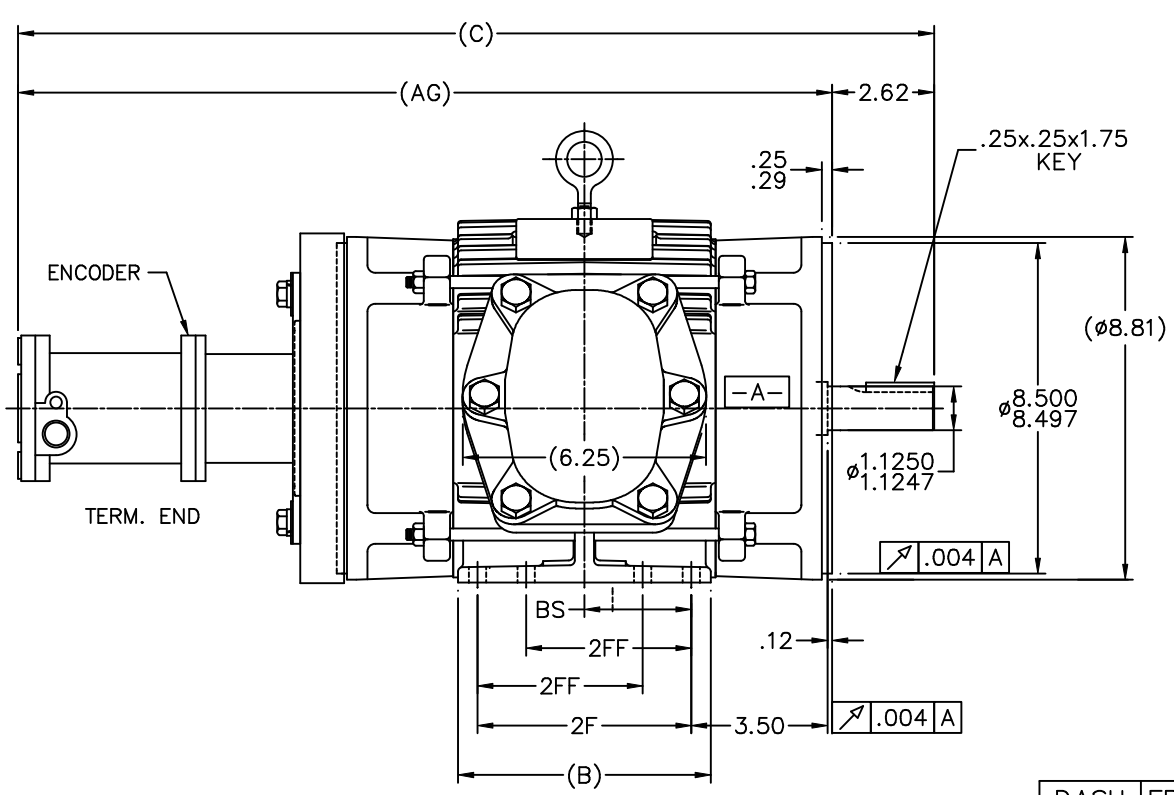


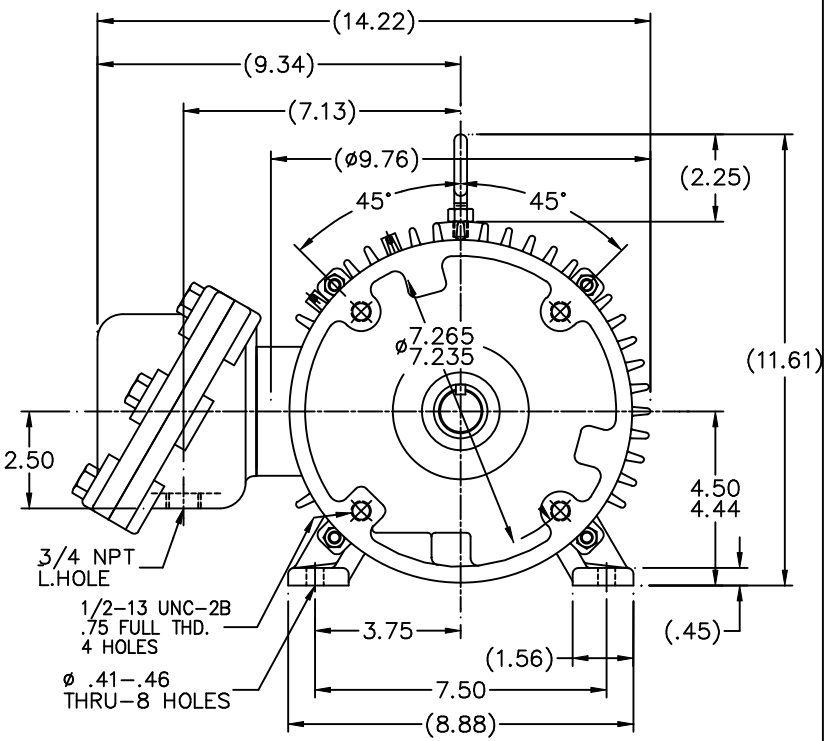


| DASH | FRAME | B | C | 2F | 2FF | AG | BS | MOUNTING |
|---|---|---|---|---|---|---|---|---|
| 575 | 182TC | 5.50 | 22.57 | – | 4.50 | 12.69 | 2.25 | F1 ONLY |
| 675 | 182TC | 6.50 | 23.57 | 5.50 | 4.50 | 13.69 | 2.75 | F1 ONLY |
| 675 | 184TC | 6.50 | 23.57 | 5.50 | – | 13.69 | 2.75 | F1 OR F2 |
| 800 | 182TC | 7.75 | 24.82 | 6.75 | 4.50 | 14.94 | 2.75 | F1 OR F2 |
| 800 | 184TC | 7.75 | 24.82 | – | 5.50 | 13.94 | 2.75 | F1 OR F2 |

NOTES:
1. CONDUIT BOX CAN BE ROTATED IN 90° STEPS.
2. CONDUIT BOX CAN BE MOUNTED ON OPPOSITE SIDE BY REMOVING BRACKETS AND TURNING FRAME 180°.
3. NAMEPLATE TO BE READ FROM CONDUIT BOX SIDE OF MOTOR

| NO. | REVISION | BY & DATE | CHK |
|---|---|---|---|
| 4 | ADDED (C) & (AG) DIM. | RJW 04-21-2005 | ML |
| 3 | ADDED 6.75" 2F DIM. TO | | |
| | 182TC – DASH 800 CN 33665 | RJW 10-25-2004 | |
| 2 | REVISED O.D.E. BRACKET AND ADDED | | |
| | ADAPTOR CN 29200-1289 | BJW 01-19-2001 | |
| 1 | NEW DRAWING MU 34791 | BJW 12-29-2000 | |

TOLERANCES UNLESS SPECIFIED: DEC. INCHES; .X ±.1; .XX ±.02; .XXX ±.005; .XXXX ±.0005; ANG ±7'30"

MARATHON ELECTRIC

DRAWN BJW 12-19-2000
CHK ML 12-28-2000
APPD PH 12-29-2000
SCALE 5=16
REF
FMF
PREV

TITLE OUTLINE – C'FACE
180TC FR. – EXP.PR. – BEI H38 TACH.
MAT'L.
FINISH
CAD FILE SS69060

RFP
DIST LB

SIZE B | DRAWING NO. SS69060 | PAGE OF | REV. 4

THIS DRAWING IN DESIGN AND DETAIL IS OUR PROPERTY AND MUST NOT BE USED EXCEPT IN CONNECTION WITH OUR WORK ALL RIGHTS OF DESIGN AND INVENTION ARE RESERVED THIS IS AN ELECTRONICALLY GENERATED DOCUMENT – DO NOT SCALE THIS PRINT