marathon®

50 Hz Motors

Model No: 131638.00
Catalog No: 131638.00

50 Hz Motor, 5 HP, 1 Ph, 50 Hz, 220 V, 3000 RPM, 184T Frame, TEFC

©2026 Marathon, All Rights Reserved.

marathon®

Product Information Packet: Model No: 131638.00, Catalog No: 131638.00 50 Hz Motor, 5 HP, 1 Ph, 50 Hz, 220 V, 3000 RPM, 184T Frame, TEFC

Nameplate Specifications

Phase	**1**	Output HP	**5 Hp**
Output KW	**3.7 kW**	Voltage	**220 V**
Speed	**2875 r/min**	Synchronous RPM	**3000 r/min**
Service Factor	**1.00**	Frame	**184T**
Enclosure	**Totally Enclosed Fan Cooled**	Thermal Protection	**No Protection**
Efficiency	**81.5 %**	Ambient Temperature	**40 °C**
Frequency	**50 Hz**	Current	**20.5 A**
Power Factor	**98**	Duty	**Continuous**
Insulation Class	**F**	Design Code	**NO DESIGN CODE**
KVA Code	**G**	Drive End Bearing Size	**6206**
Opp Drive End Bearing Size	**6205**	UL	**Recognized**
CSA	**Y**	CE	**Y**
IP Code	**43**	Number of Speeds	**1**

Technical Specifications

Electrical Type	**Capacitor Start Capacitor Run**	Starting Method	**Across The Line**
Poles	**2**	Rotation	**Selective Counterclockwise**
Resistance Main	**.3633 O**	Mounting	**Rigid Base**
Motor Orientation	**Horizontal**	Drive End Bearing	**Ball**
Opp Drive End Bearing	**Ball**	Frame Material	**Rolled Steel**
Shaft Type	**T**	Overall Length	**17.46 in**
Frame Length	**12.0 in**	Shaft Diameter	**1 1/8 in**
Shaft Extension	**2.75 in**	Assembly/Box Mounting	**F1 Only**

Drawings

Connection Drawing	**005413.01**	Outline Drawing	**035352-1200**

This is an uncontrolled document once printed or downloaded and is subject to change without notice. Date Created: 13/10/2026

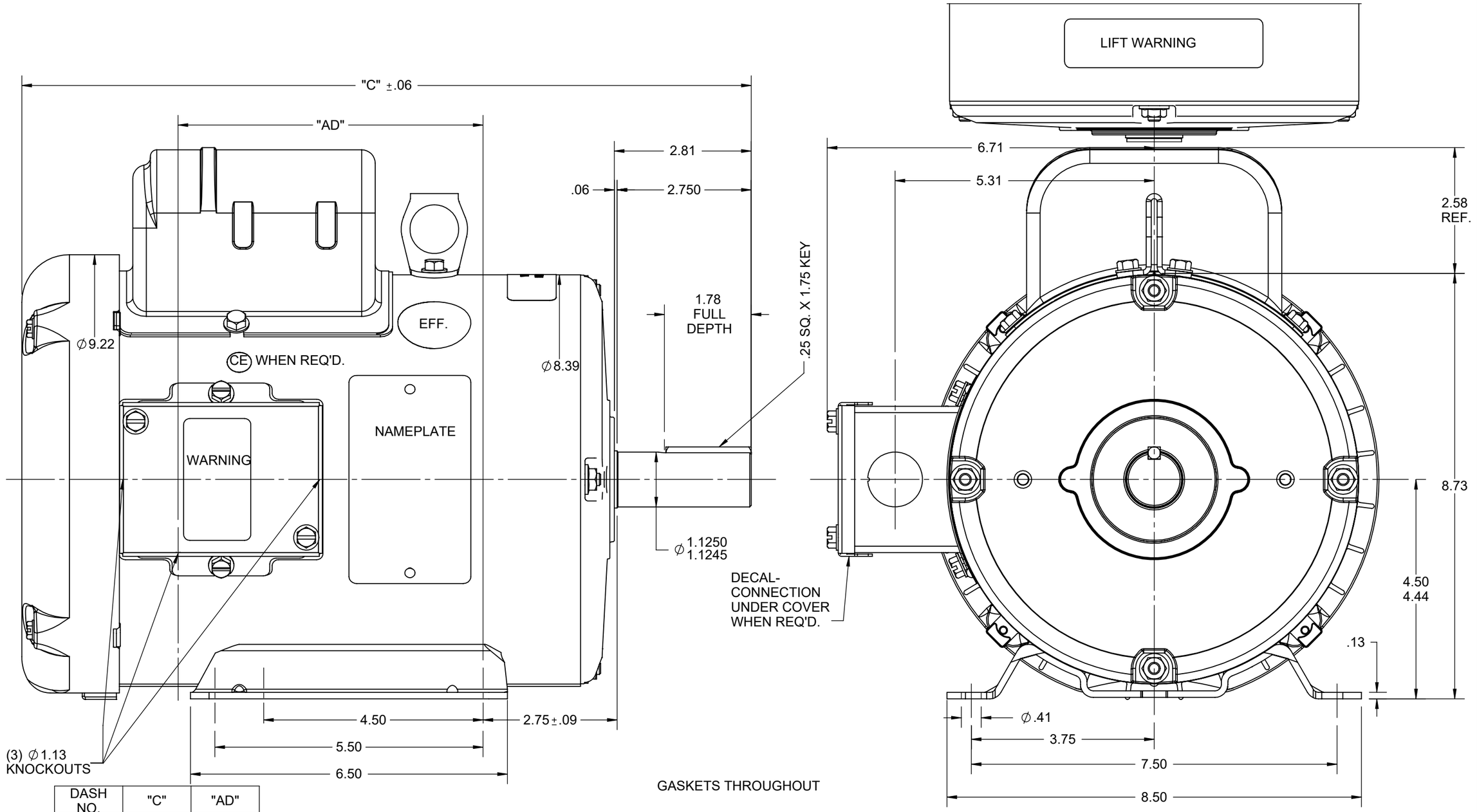

GASKETS THROUGHOUT

DASH NO.	"C"	"AD"
800	13.46	4.75
850	13.96	5.25
900	14.46	5.75
950	14.96	6.25
1000	15.46	6.75
1050	15.96	7.25
1100	16.46	7.75
1150	16.96	8.25
1200	17.46	8.75

DRAWING REVISION	REVISION BY	REV DATE/© DATE
E	SB	08/25/2025
REQUEST NUMBER	APPROVED BY	DATE
CR-0023556	SBD	08/25/2025

REQUEST NUMBER DESCRIPTION
DRAWING TITLE BLOCK UPDATED

COPYRIGHT (PER REVISION DATE) MARATHON ELECTRIC, LLC. ALL RIGHTS RESERVED. PROPRIETARY AND CONFIDENTIAL INFORMATION - THIS DOCUMENT IS THE PROPERTY OF MARATHON ELECTRIC, LLC. ("OWNER") AND CONTAINS OWNER'S PROPRIETARY INFORMATION. ANY PERSON, CORPORATION OR OTHER FIRM RECEIVING IT IS DEEMED, BY RECEIVING IT, TO AGREE THAT IT, AND/OR ANY PART OF IT, SHALL NOT BE DISCLOSED TO ANY PERSON, CORPORATION OR OTHER ENTITY, DUPLICATED, AND/OR USED, EXCEPT AS EXPRESSLY APPROVED IN WRITING IN ADVANCE BY OWNER. THIS DOCUMENT SHALL BE RETURNED TO OWNER UPON REQUEST. IT MAY BE SUBJECT TO CERTAIN RESTRICTIONS UNDER APPLICABLE EXPORT CONTROL LAWS AND REGULATIONS.

TOLERANCES (EXCEPT AS NOTED):

DEC.	INCH	mm	ANGLE
.X	±0.1	[±3]	±7' 30"
.XX	±0.03	[±0.8]	
.XXX	±0.005	[±0.13]	
.XXXX	±0.0005	[±0.013]	

REMOVE BURRS & BREAK SHARP EDGES: .003/.015 [.08/.38] X 45°
CORNER FILLETS: R.02 [.5]
MACHINED SURFACES: 200/ 5.1/ INCH mm
mm DIMENSIONS IN [BRACKETS] ARE FOR REFERENCE ONLY

DRAWN BY	PG
DATE	6/20/97
APPROVED BY	
DATE	
REFERENCE	

marathon™

DESCRIPTION
OUTLINE
180T FRAME - TEFC - RIGID MOUNT

MATERIAL | PROCESS/FINISH

THIRD ANGLE PROJECTION

SIZE	DRAWING NUMBER	SHEET
B	035352	1 OF 1

Uncontrolled Copy

005413-01

VIEW FROM OUTSIDE OF MOTOR AT SWITCH END.

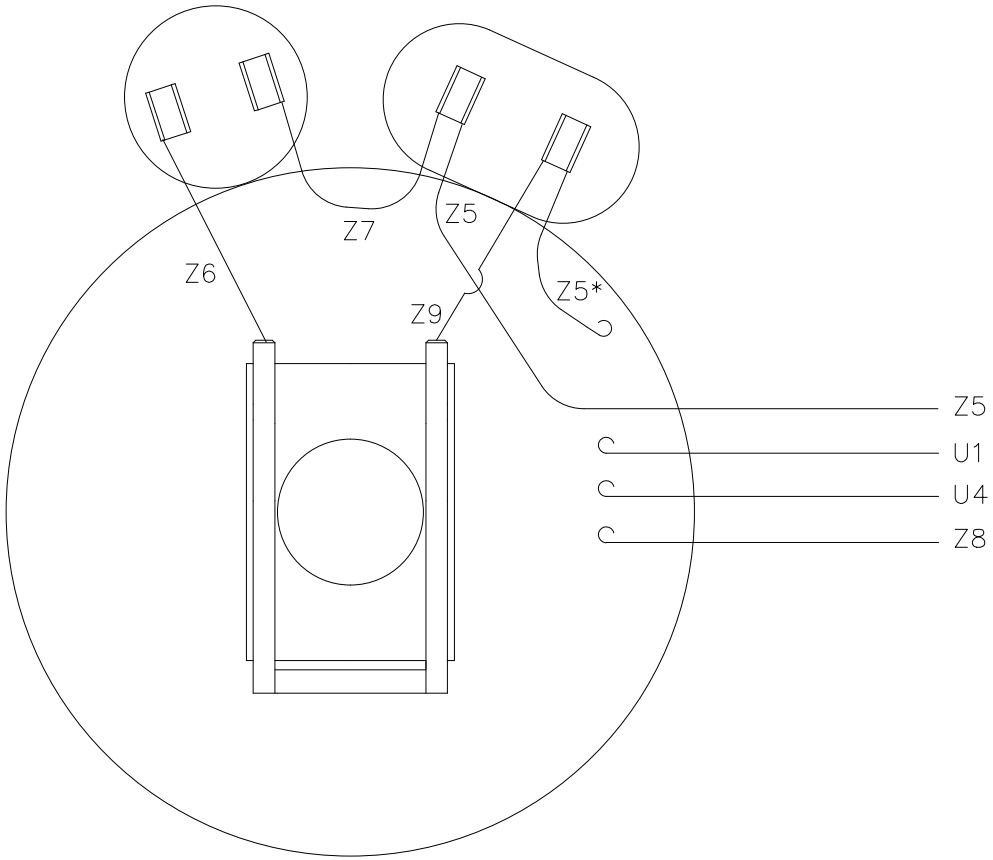

* THIS LEAD MAY BE WHITE

LINE LEADS

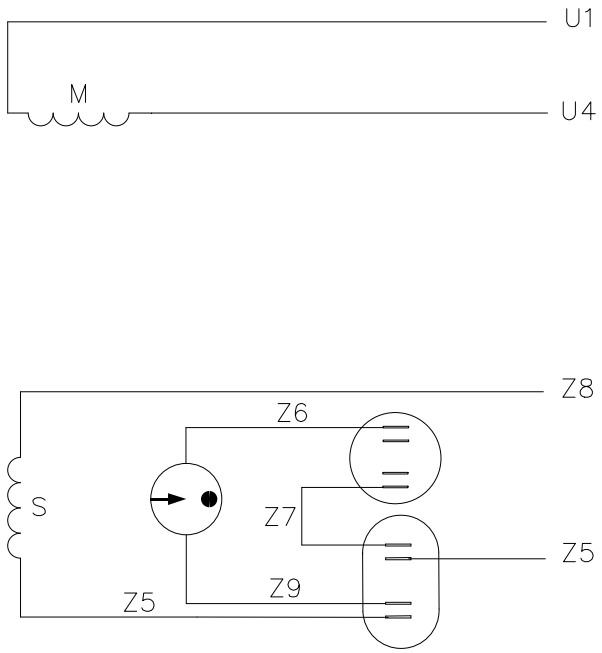

ROTATION FACING LEAD END	L1	L2
C.C.W.	U1,Z8	U4,Z5
C.W.	U1,Z5	U4,Z8

DRAWING REVISION: D	REVISION BY: SV	REV DATE/ © DATE: 05/11/2026
REQUEST NUMBER: CR-0026249	APPROVED BY: RMS	DATE: 05/11/2026

REQUEST NUMBER DESCRIPTION: DRAWING TITLE BLOCK UPDATED

COPYRIGHT (PER REVISION DATE) MARATHON ELECTRIC, LLC. ALL RIGHTS RESERVED. PROPRIETARY AND CONFIDENTIAL INFORMATION - THIS DOCUMENT IS THE PROPERTY OF MARATHON ELECTRIC, LLC. ("OWNER") AND CONTAINS OWNER'S PROPRIETARY INFORMATION. ANY PERSON, CORPORATION OR OTHER FIRM RECEIVING IT IS DEEMED, BY RECEIVING IT, TO AGREE THAT IT, AND/OR ANY PART OF IT, SHALL NOT BE DISCLOSED TO ANY PERSON, CORPORATION OR OTHER ENTITY, DUPLICATED, AND/OR USED, EXCEPT AS EXPRESSLY APPROVED IN WRITING IN ADVANCE BY OWNER. THIS DOCUMENT SHALL BE RETURNED TO OWNER UPON REQUEST. IT MAY BE SUBJECT TO CERTAIN RESTRICTIONS UNDER APPLICABLE EXPORT CONTROL LAWS AND REGULATIONS.

TOLERANCES (EXCEPT AS NOTED):

DEC.	INCH	mm	ANGLE
.X	±0.1	[±3]	±0.5°
.XX	±0.01	[±0.3]	
.XXX	±0.005	[±0.13]	
.XXXX	±0.0005	[±0.013]	

REMOVE BURRS & BREAK SHARP EDGES: .003/.015 [.08/.38] X 45 °
CORNER FILLETS: R.02 [.5]
MACHINED SURFACES: 125 INCH / 3.2 mm
mm DIMENSIONS IN [BRACKETS] ARE FOR REFERENCE ONLY

DRAWN BY: DBT	
DATE: 07/21/97	
APPROVED BY:	
DATE:	
REFERENCE: 005018-01	
THIRD ANGLE PROJECTION	

marathon™

DESCRIPTION: EXTERNAL WIRING DIAGRAM
TYPE "K" W/O PROTECTOR

MATERIAL	PROCESS/FINISH
DECAL - 80670	

SIZE	DRAWING NUMBER	SHEET
A	4 of 4 — 005413-01	1 OF 1