marathon®

# 50 Hz Motors

**Model No:** 131555.00
**Catalog No:** 131555.00

50 Hz Motor, 5 HP, 1 Ph, 50 Hz, 220 V, 1500 RPM, 184T Frame, DP

©2026 Marathon, All Rights Reserved.

marathon®

# Product Information Packet: Model No: 131555.00, Catalog No: 131555.00  50 Hz Motor, 5 HP, 1 Ph, 50 Hz, 220 V, 1500 RPM, 184T Frame, DP

## Nameplate Specifications

| | | | |
|---|---|---|---|
| Phase | **1** | Output HP | **5 Hp** |
| Output KW | **3.7 kW** | Voltage | **220 V** |
| Speed | **1440 r/min** | Synchronous RPM | **1500 r/min** |
| Service Factor | **1.15** | Frame | **184T** |
| Enclosure | **Drip Proof** | Thermal Protection | **No Protection** |
| Efficiency | **80 %** | Ambient Temperature | **40 °C** |
| Frequency | **50 Hz** | Current | **23.2 A** |
| Power Factor | **90** | Duty | **Continuous** |
| Insulation Class | **F** | Design Code | **NO DESIGN CODE** |
| KVA Code | **G** | Drive End Bearing Size | **6206** |
| Opp Drive End Bearing Size | **6205** | UL | **Recognized** |
| CSA | **Y** | CE | **Y** |
| IP Code | **22** | Number of Speeds | **1** |

## Technical Specifications

| | | | |
|---|---|---|---|
| Electrical Type | **Capacitor Start Capacitor Run** | Starting Method | **Across The Line** |
| Poles | **4** | Rotation | **Selective Counterclockwise** |
| Resistance Main | **0 O** | Mounting | **Rigid Base** |
| Motor Orientation | **Horizontal** | Drive End Bearing | **Ball** |
| Opp Drive End Bearing | **Ball** | Frame Material | **Rolled Steel** |
| Shaft Type | **T** | Overall Length | **15.69 in** |
| Frame Length | **11.5 in** | Shaft Diameter | **1 1/8 in** |
| Shaft Extension | **2.75 in** | Assembly/Box Mounting | **F1 Only** |

## Drawings

| | | | |
|---|---|---|---|
| Connection Drawing | **005413.01** | Outline Drawing | **035370-1150** |

This is an uncontrolled document once printed or downloaded and is subject to change without notice. Date Created: 13/10/2026

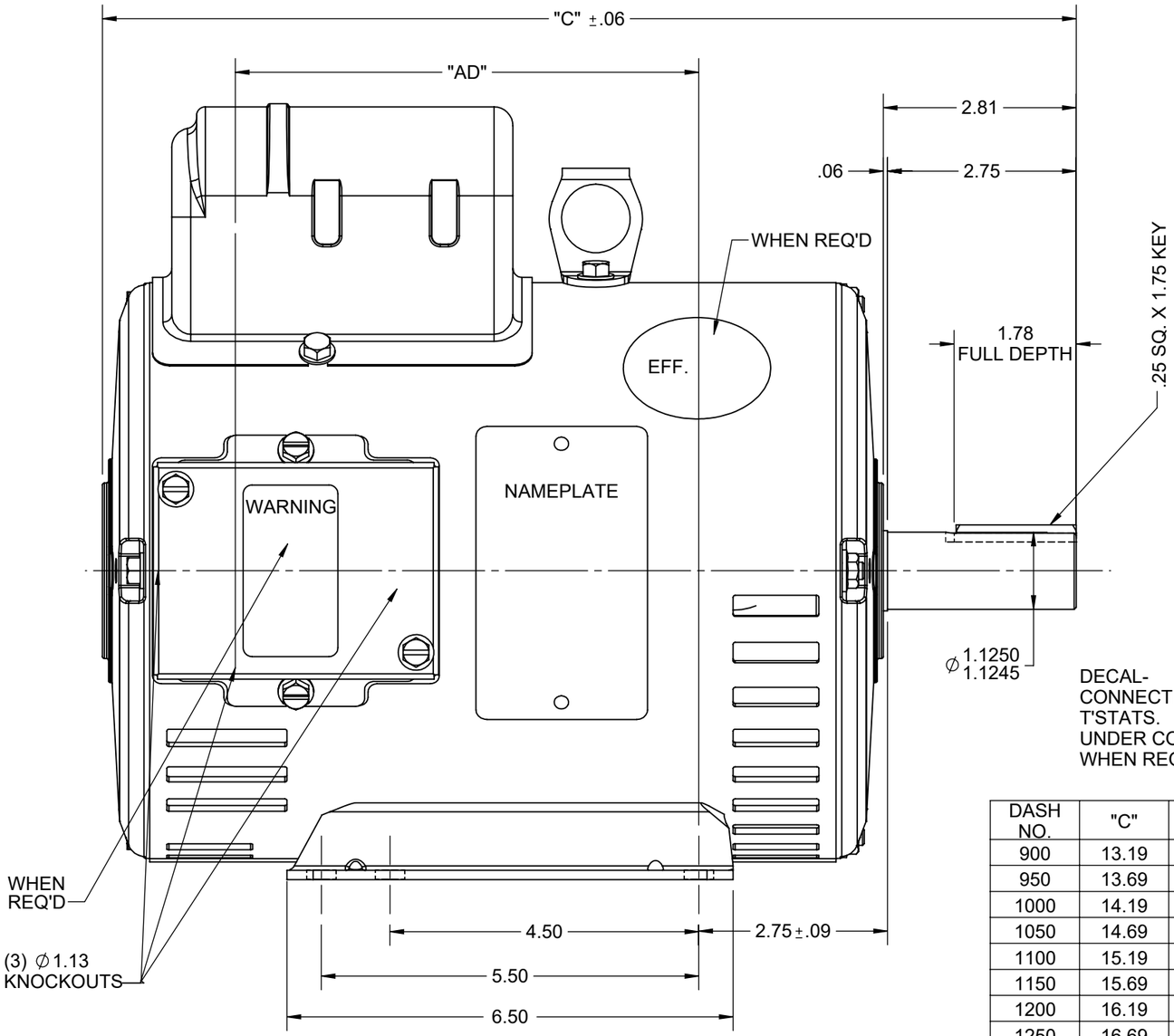


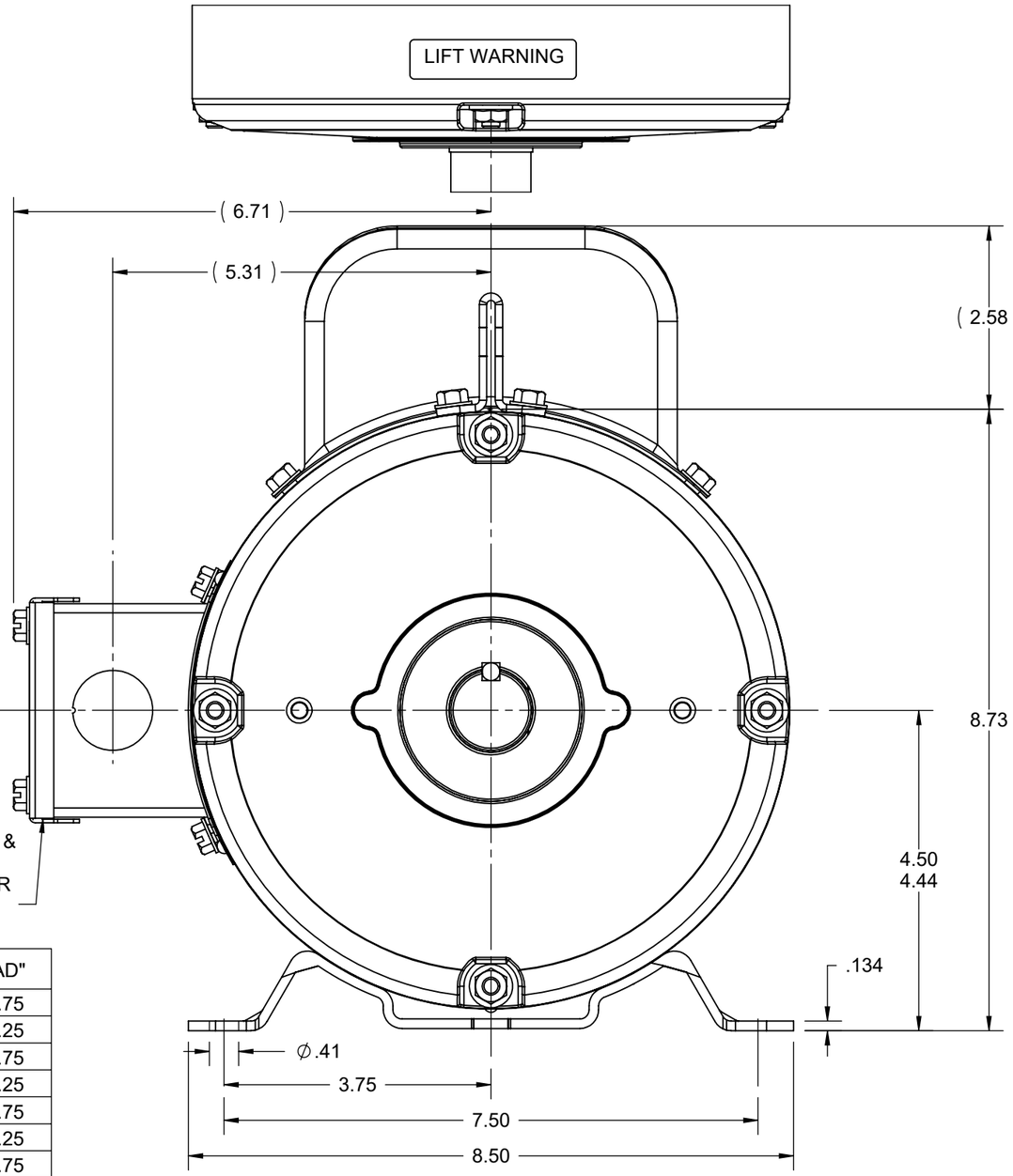


| DASH NO. | "C" | "AD" |
|---|---|---|
| 900 | 13.19 | 5.75 |
| 950 | 13.69 | 6.25 |
| 1000 | 14.19 | 6.75 |
| 1050 | 14.69 | 7.25 |
| 1100 | 15.19 | 7.75 |
| 1150 | 15.69 | 8.25 |
| 1200 | 16.19 | 8.75 |
| 1250 | 16.69 | 9.25 |

GASKETS THROUGHOUT

| | | |
|---|---|---|
| DRAWING REVISION: F | REVISION BY: SB | REV DATE/© DATE: 07/23/2025 |
| REQUEST NUMBER: CR-0023556 | APPROVED BY: SBD | DATE: 07/23/2025 |
| REQUEST NUMBER DESCRIPTION: DRAWING TITLE BLOCK UPDATED | | |

COPYRIGHT (PER REVISION DATE) MARATHON ELECTRIC, LLC. ALL RIGHTS RESERVED. PROPRIETARY AND CONFIDENTIAL INFORMATION - THIS DOCUMENT IS THE PROPERTY OF MARATHON ELECTRIC, LLC. ("OWNER") AND CONTAINS OWNER'S PROPRIETARY INFORMATION. ANY PERSON, CORPORATION OR OTHER FIRM RECEIVING IT IS DEEMED, BY RECEIVING IT, TO AGREE THAT IT, AND/OR ANY PART OF IT, SHALL NOT BE DISCLOSED TO ANY PERSON, CORPORATION OR OTHER ENTITY, DUPLICATED, AND/OR USED, EXCEPT AS EXPRESSLY APPROVED IN WRITING IN ADVANCE BY OWNER. THIS DOCUMENT SHALL BE RETURNED TO OWNER UPON REQUEST. IT MAY BE SUBJECT TO CERTAIN RESTRICTIONS UNDER APPLICABLE EXPORT CONTROL LAWS AND REGULATIONS.

TOLERANCES (EXCEPT AS NOTED):

| DEC. | INCH | mm | ANGLE |
|---|---|---|---|
| .X | ±0.1 | [±3] | ±7' 30" |
| .XX | ±0.03 | [±0.8] | |
| .XXX | ±0.005 | [±0.13] | |
| .XXXX | ±0.0005 | [±0.013] | |

REMOVE BURRS & BREAK SHARP EDGES: .003/.015 [.08/.38] X 45°
CORNER FILLETS: R.02 [.5]
MACHINED SURFACES: 200 INCH / 5.1 mm
mm DIMENSIONS IN [BRACKETS] ARE FOR REFERENCE ONLY

| | |
|---|---|
| DRAWN BY: PG | marathon™ |
| DATE: 10/02/97 | |
| APPROVED BY | DESCRIPTION: OUTLINE — DRIP PROOF - RIGID MOUNT |
| DATE | |
| REFERENCE | MATERIAL / PROCESS/FINISH |
| THIRD ANGLE PROJECTION | SIZE: B / DRAWING NUMBER: 035370 / SHEET: 1 OF 1 |

Uncontrolled Copy

005413-01

VIEW FROM OUTSIDE OF MOTOR AT SWITCH END.

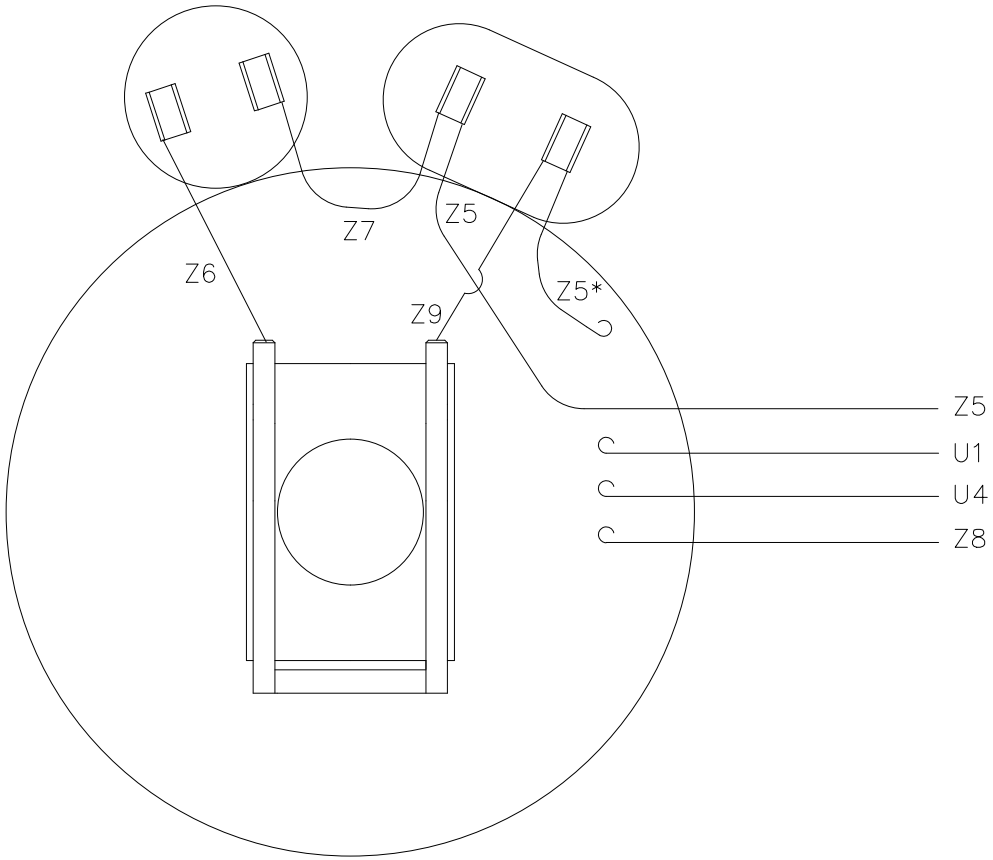


* THIS LEAD MAY BE WHITE

## LINE LEADS

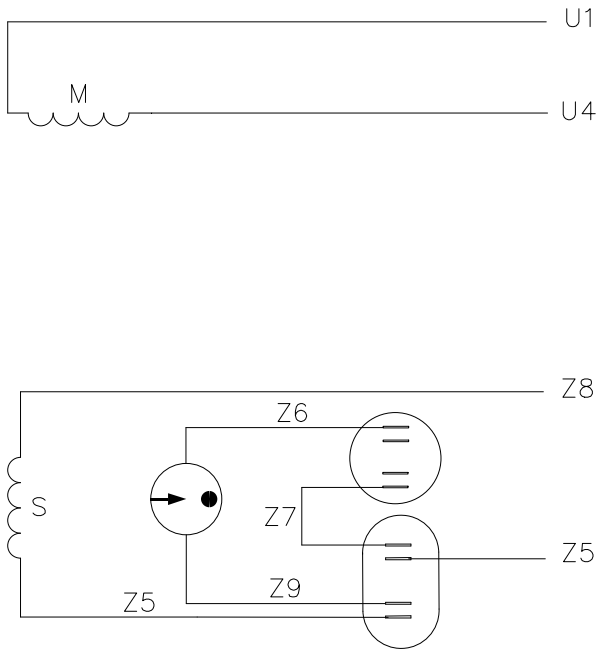


| ROTATION FACING LEAD END | L1 | L2 |
|---|---|---|
| C.C.W. | U1,Z8 | U4,Z5 |
| C.W. | U1,Z5 | U4,Z8 |

| | | |
|---|---|---|
| DRAWING REVISION: D | REVISION BY: SV | REV DATE/ © DATE: 05/11/2026 |
| REQUEST NUMBER: CR-0026249 | APPROVED BY: RMS | DATE: 05/11/2026 |

REQUEST NUMBER DESCRIPTION: DRAWING TITLE BLOCK UPDATED

COPYRIGHT (PER REVISION DATE) MARATHON ELECTRIC, LLC. ALL RIGHTS RESERVED. PROPRIETARY AND CONFIDENTIAL INFORMATION - THIS DOCUMENT IS THE PROPERTY OF MARATHON ELECTRIC, LLC. ("OWNER") AND CONTAINS OWNER'S PROPRIETARY INFORMATION. ANY PERSON, CORPORATION OR OTHER FIRM RECEIVING IT IS DEEMED, BY RECEIVING IT, TO AGREE THAT IT, AND/OR ANY PART OF IT, SHALL NOT BE DISCLOSED TO ANY PERSON, CORPORATION OR OTHER ENTITY, DUPLICATED, AND/OR USED, EXCEPT AS EXPRESSLY APPROVED IN WRITING IN ADVANCE BY OWNER. THIS DOCUMENT SHALL BE RETURNED TO OWNER UPON REQUEST. IT MAY BE SUBJECT TO CERTAIN RESTRICTIONS UNDER APPLICABLE EXPORT CONTROL LAWS AND REGULATIONS.

TOLERANCES (EXCEPT AS NOTED):

| DEC. | INCH | mm | ANGLE |
|---|---|---|---|
| .X | ±0.1 | [±3] | ±0.5° |
| .XX | ±0.01 | [±0.3] | |
| .XXX | ±0.005 | [±0.13] | |
| .XXXX | ±0.0005 | [±0.013] | |

REMOVE BURRS & BREAK SHARP EDGES: .003/.015 [.08/.38] X 45 °
CORNER FILLETS: R.02 [.5]
MACHINED SURFACES: 125 INCH / 3.2 mm
mm DIMENSIONS IN [BRACKETS] ARE FOR REFERENCE ONLY

| | |
|---|---|
| DRAWN BY: DBT | |
| DATE: 07/21/97 | |
| APPROVED BY: | |
| DATE: | |
| REFERENCE: 005018-01 | |
| THIRD ANGLE PROJECTION | |

marathon™

DESCRIPTION: EXTERNAL WIRING DIAGRAM
TYPE "K" W/O PROTECTOR

| MATERIAL | PROCESS/FINISH |
|---|---|
| DECAL - 80670 | |

| SIZE | DRAWING NUMBER | SHEET |
|---|---|---|
| A | 4 of 4 — 005413-01 | 1 OF 1 |